REVISIONS		
ISS	ZONE	DESCRIPTION\PER REQUEST\DATE

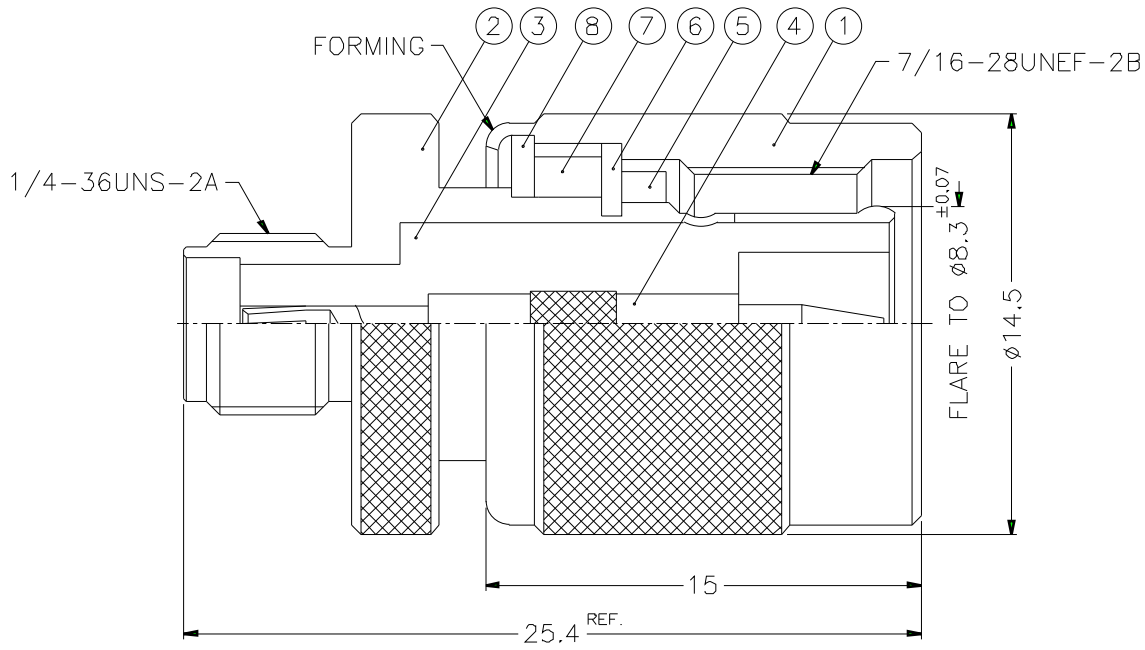

NOTES: FINISH (PLATING THICKNESS IN MICRO-INCHES)
1. BRASS PER QQ-B-626
2. BRASS PER QQ-B-613
3. NICKEL PL. 100 MIN. THICK OVER COPPER STRIKE
4. PHOSPHOR BRONZE PER QQ-B-750
5. GOLD PL. 3 MIN. THICK OVER NICKEL PL. 100 MIN. THICK OVER COPPER STRIKE
6. TEFLON MIL-P-19468

NO.	DESCRIPTION	MATERIAL	FINISH	Q'TY	DRAWING NO.
8	WASHER	NOTE 2	NOTE 3	1	WS-128/9X08
7	RING	DELRIN	NATURAL	1	T50000-6-A
6	RETAINER RING	NOTE 1	NOTE 3	1	B50000-5
5	GASKET	RUBBER	RED	1	GS-105/8X15
4	CONTACT PIN	NOTE 4	NOTE 5	1	RSA-3472-4
3	INSULATOR	NOTE 6	NATURAL	1	RSA-3472-3
2	BODY	NOTE 1	NOTE 3	1	RSA-3472-2-B
1	SHELL	NOTE 1	NOTE 3	1	T50000-1-B

DIMENSIONS ARE IN MILLIMETERS

UNLESS OTHERWISE SPECIFIED TOLERANCES
0.5-6 = ±0.2
6-30 = ±0.4
30-120 = ±0.6
120-315 = ±1
315-1000 = ±1.6
1000-2000 = ±2.4

SCALE 4/1 ISSUE A

PART NO. SMAF-TM-NT3G-50

APPROVED DATE 10-11-01'

CHECKED DATE 10-11-01'

DRAWN DATE 10-11-01'

FILE NO.

Amphenol

TITLE
SMA FEMALE TO TNC MALE ADAPTOR

DRAWING NO.
KJ-SMAF-TM-NT3G-50

ITEM NO